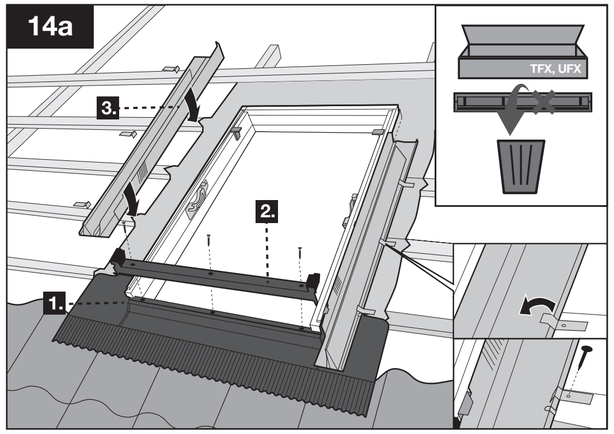

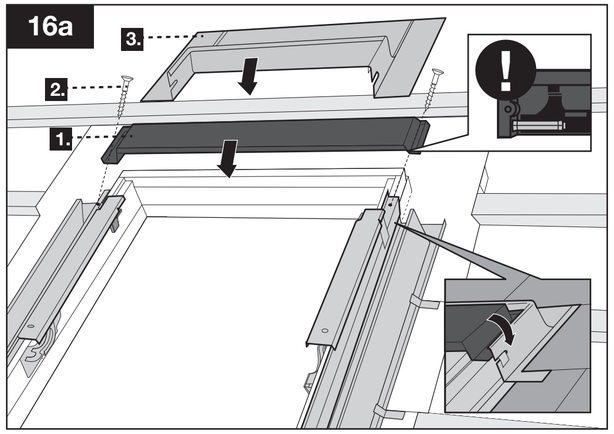

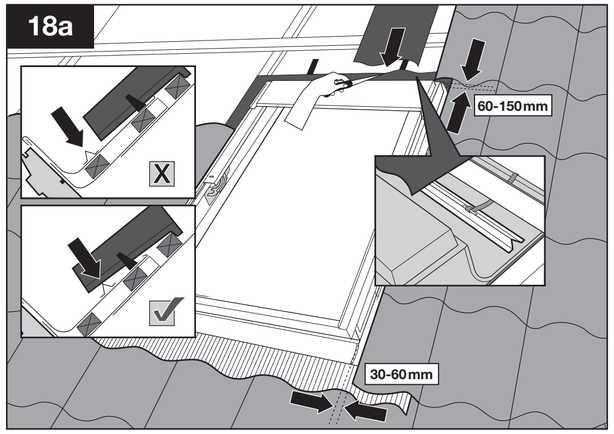

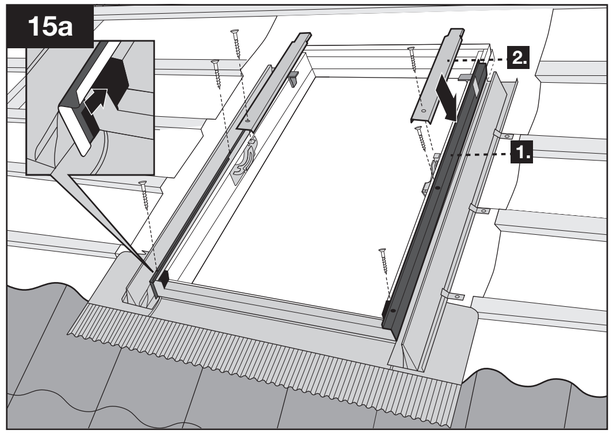

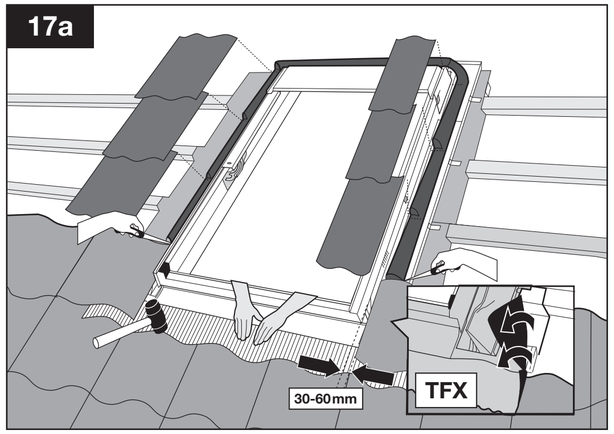

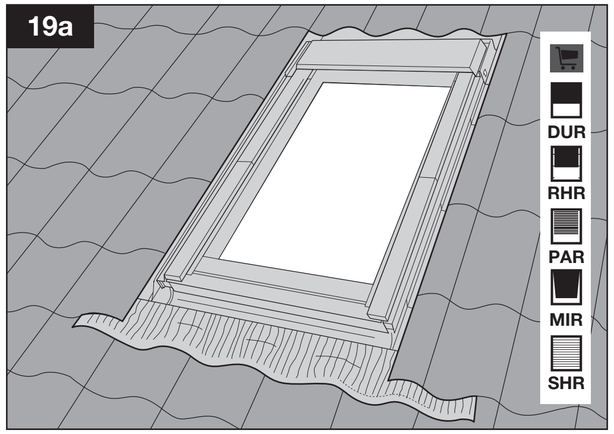

ROOF WINDOW

FR Fenêtre de toit • **DE** Dachfenster • **DK** Ovenlysvindue
NL Dakvenster • **IT** Finestra per tetti • **HU** Tetőtéri ablak
SK Strešné okná • **PL** Okno dachowe • **RO** Ferestre de mansarda
CZ Střešní okna • **SI** Strešno okno • **HR** Krovni prozor

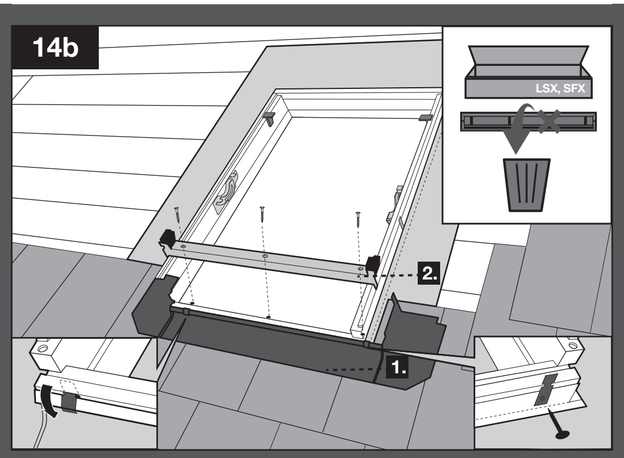

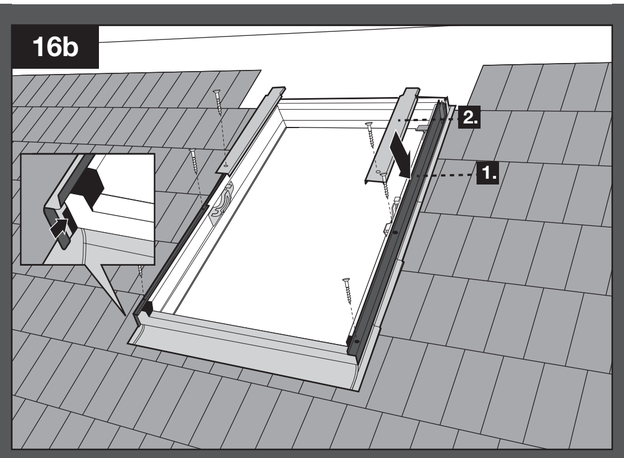

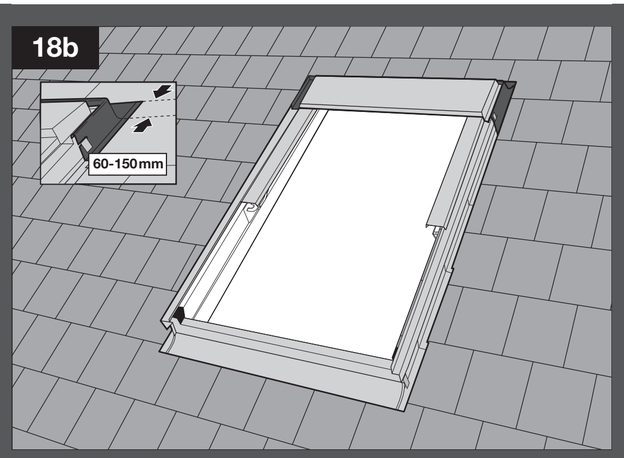

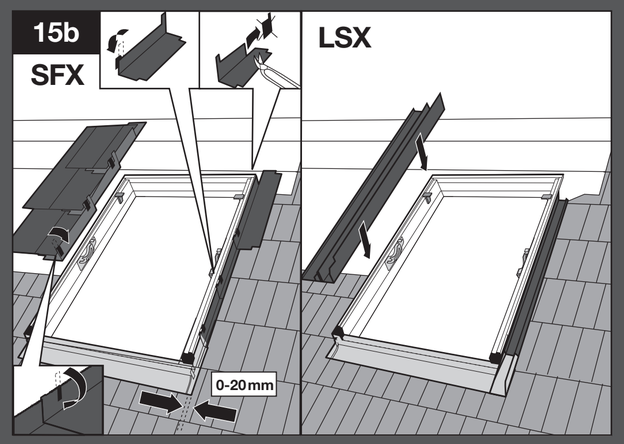

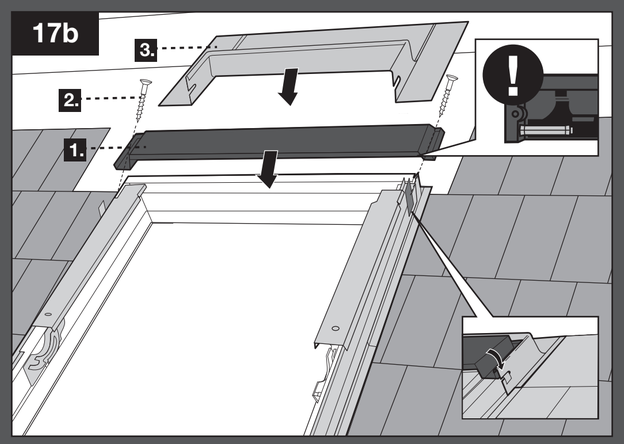

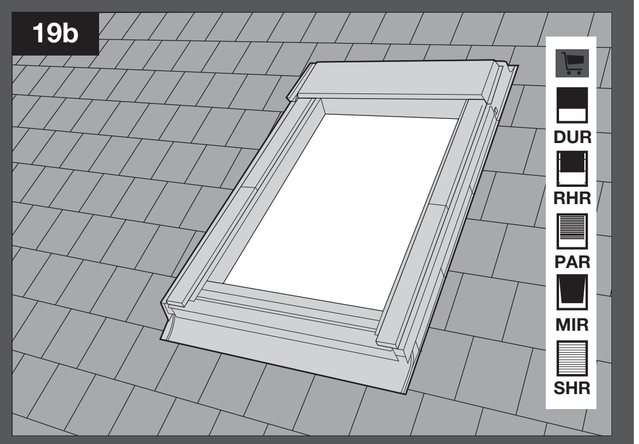

SFX 15-90°
TFX 15-90°
UFX 15-90°
LSX 15-90°
SFF 20-90°
TFP 25-90°
SSX 15*-90°
UBX 15-90°

*DK - KSS 25-90°

MS_PW_JP 4040948

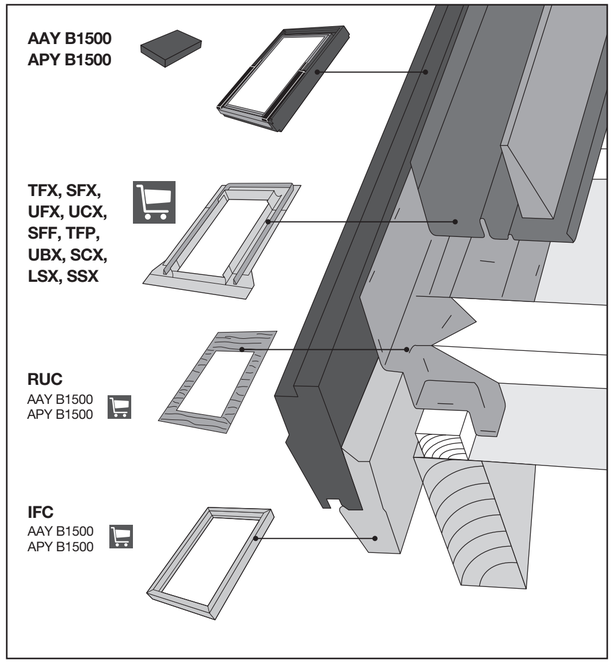
AAY B1500
APY B1500
TFX, SFX, UFX, UCX, SFF, TFP, UBX, SCX, LSX, SSX
RUC
AAY B1500
APY B1500
IFC
AAY B1500
APY B1500

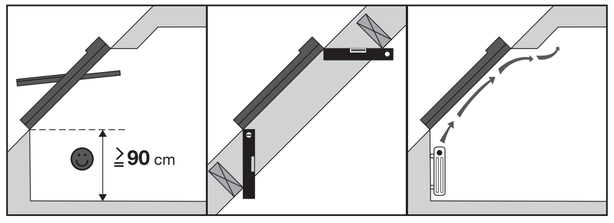
≧90 cm

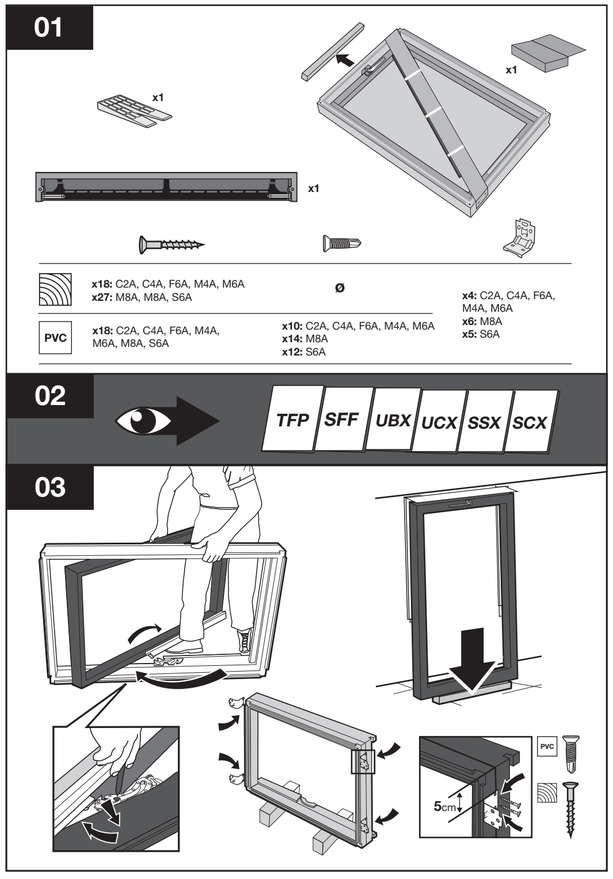
01
x1
x1
x1
x18: C2A, C4A, F6A, M4A, M6A
x27: M8A, M8A, S6A
ø
x4: C2A, C4A, F6A, M4A, M6A
x6: M8A
x5: S6A
PVC
x18: C2A, C4A, F6A, M4A, M6A, M8A, S6A
x10: C2A, C4A, F6A, M4A, M6A
x14: M8A
x12: S6A
02
TFP
SFF
UBX
UCX
SSX
SCX
03
PVC
5cm

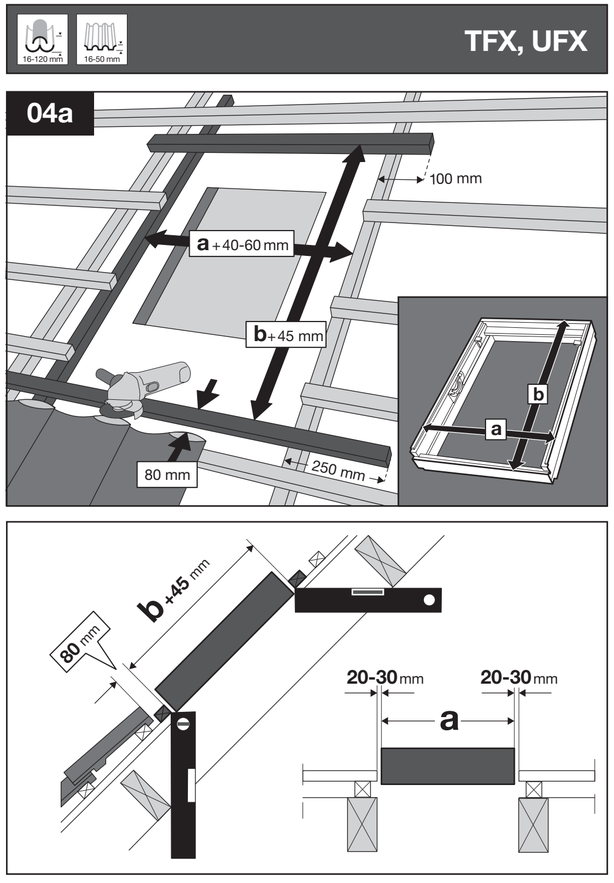
16-120 mm
16-50 mm
TFX, UFX
04a
100 mm
a +40-60 mm
b +45 mm
80 mm
250 mm
b
a
b +45 mm
80 mm
20-30 mm
20-30 mm
a

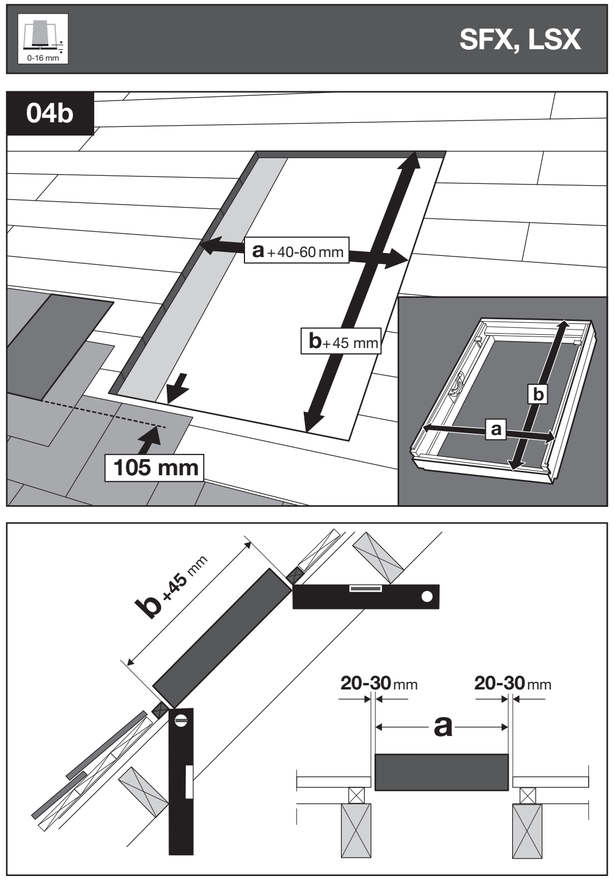
0-16 mm
SFX, LSX
04b
a +40-60 mm
b +45 mm
105 mm
b
a
b +45 mm
20-30 mm
20-30 mm
a

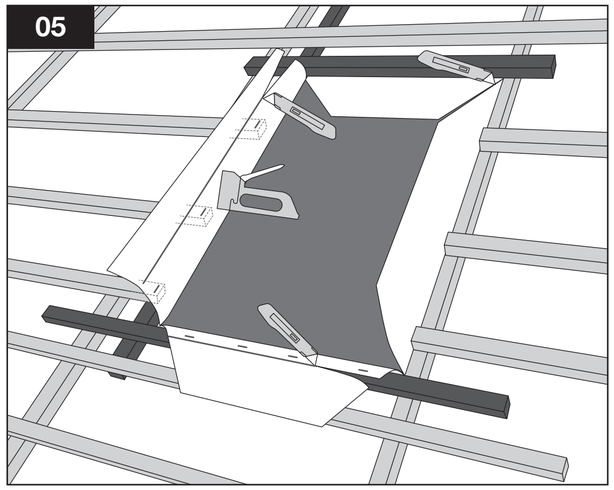
05

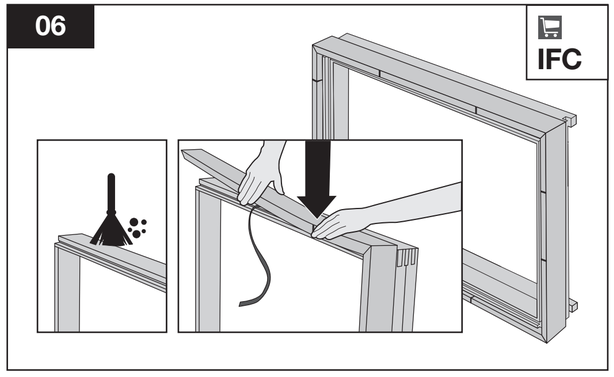
06
IFC

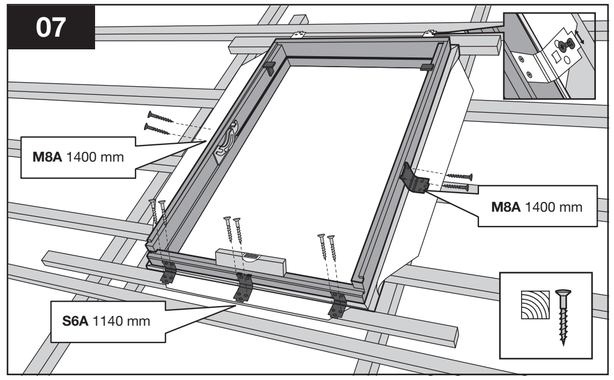
07
M8A 1400 mm
M8A 1400 mm
S6A 1140 mm

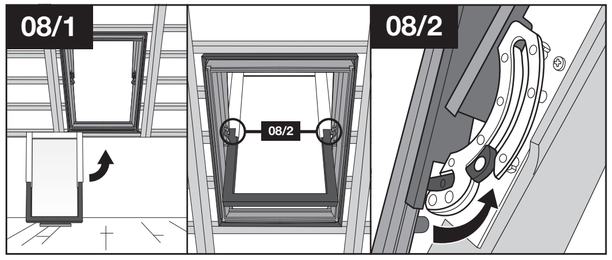
08/1
08/2
08/2

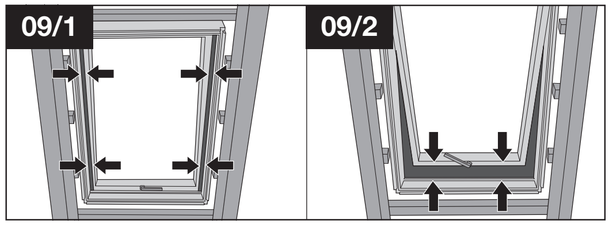
09/1
09/2

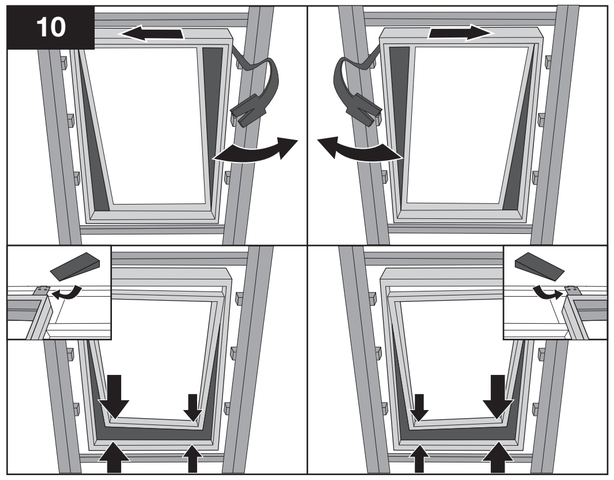
10

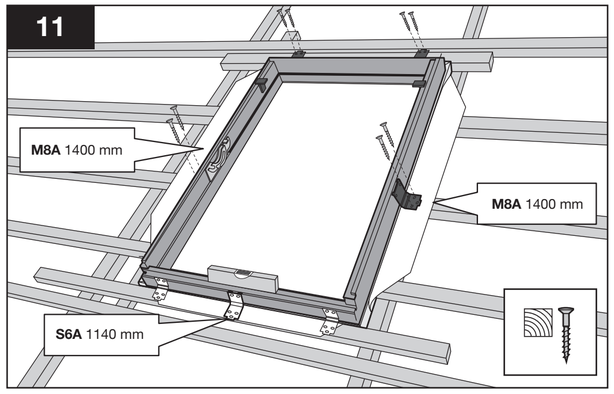
11
M8A 1400 mm
M8A 1400 mm
S6A 1140 mm

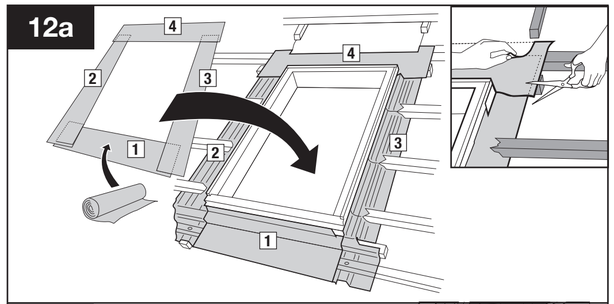
12a
4
4
2
3
3
1
2
1

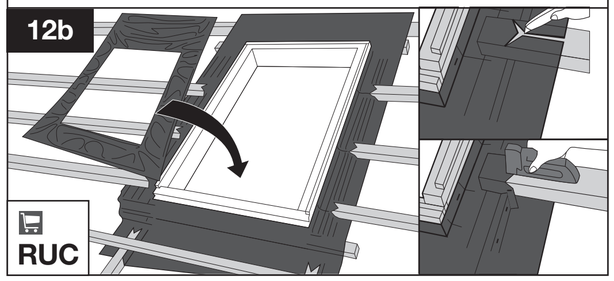
12b
RUC

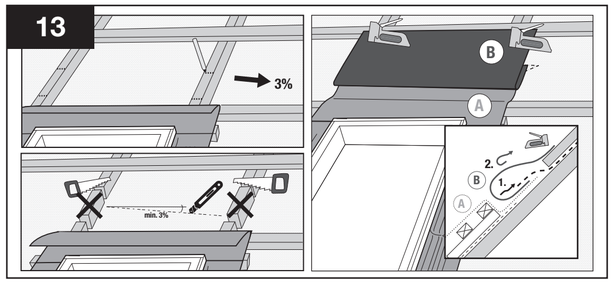
13
3%
min. 3%
B
A
2.
B
1.
A